CAD FILE :

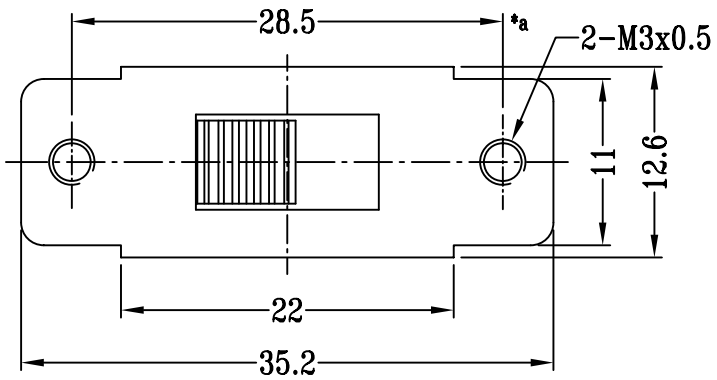

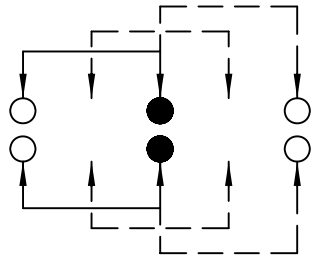

SCHEMATIC (NON-SHORTING)

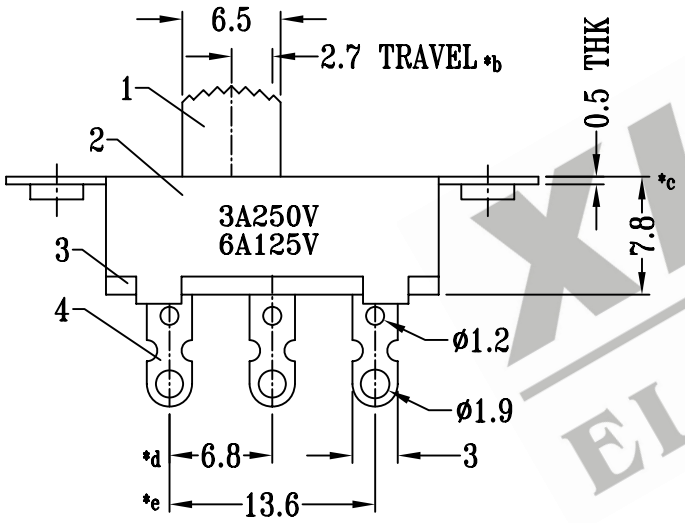

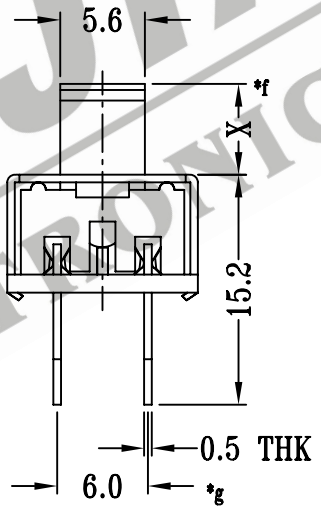

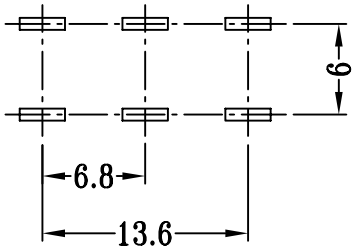

P.C.B LAYOUT

注:带"*"表示关键尺寸(7个)

XIEJIA ELECTRONICS

NO.	PART NAME	MATERIAL	QTY.	FINISHING
8	CONTACT CLIP	PBS STRIP	2	Ag PLATED
7	POSITION PLATE	STEEL STRIP	1	Ni PLATED
6	STEEL BALL	STEEL	1	NATURAL
5	SPRING	STEEL WIRE	1	TEMPER
4	TERMINAL	BRASS STRIP	6	Ag PLATED OVER Ni PLATED
3	TERMINAL BASE	PHENOLIC RESIN	1	BLACK
2	FRAME	STEEL STRIP	1	Ni PLATED
1	KNOB	PC	1	BLACK

TOLERANCE UNLESS SPECIFIED
WITHIN: 1.5±0.1mm
OVER : 1.5±0.2mm

SHENZHEN XIEJIA ELECTRONICS CO.,LTD.

ISSUE	DATE	DESCRIPTIONS	APPD

TITLE: VERTICAL SLIDE SWITCH

UNIT : M M

DRWG NO : XJ-DR-SS23E10-00

MODEL: SS-23E10

SCALE : 2:1

DWN.	ZHOUYU	2004-3-20
CHK'D	FANGYING	2004-3-20
APPD.	KANGXINAN	2004-3-20

ALL MATERIALS MUST BE COMPLIANT TO ROHS